PETWORTH FITTING INSTRUCTIONS

Hogarth FINE ART ©

Patent No. 0001477.9. www.hogarthfineart.com

HOGARTH PICTURE LIGHTS PERFORM BEST WHEN ATTACHED TO THE FRAME
WARNING- DO NOT CONNECT LIGHT TO MAINS WITHOUT THE TRANSFORMER

Cable with black line is positive/hot

FIX TO FRAME

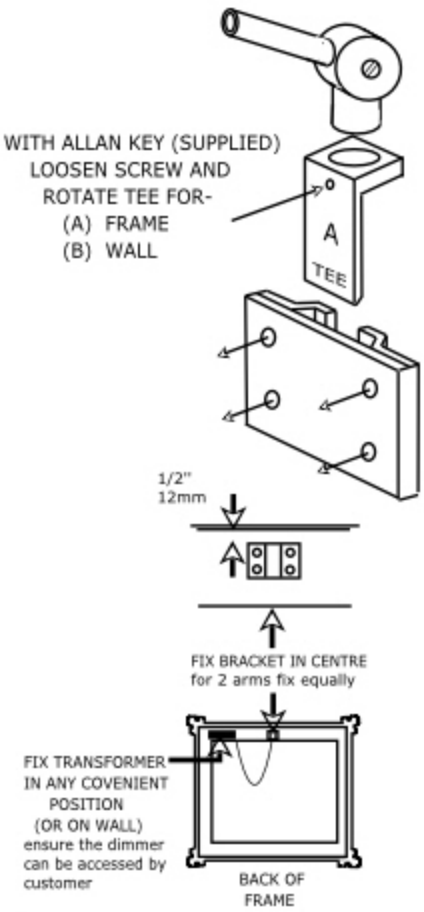

Follow the appropriate national wiring regulations. Lights sgould be installed by a qualified electrician.
The light should be connected to the lighting circuit, or fused at a maximum of 3AMPS.

Disconnect from the mains supply before installation, changing the bulb, maintenance.

Cleaning.
Disconnect from Mains supply.
Allow to cool down.

We accept no responsibility for modified lights, affects of cleaning or the accumulation of dust.

☐ Dimmable ☐ Do not fit to a dimmer switch

☐ Frame Set up to fit to ☐ Wall

Keep intensity to a minimum as over brightness can effect the art work
Recommended levels are.
200 Lumen for Oils
50 Lumen for watercolours

Depending on the structure of the wall a wooden batten can be used

FIX TO WALL

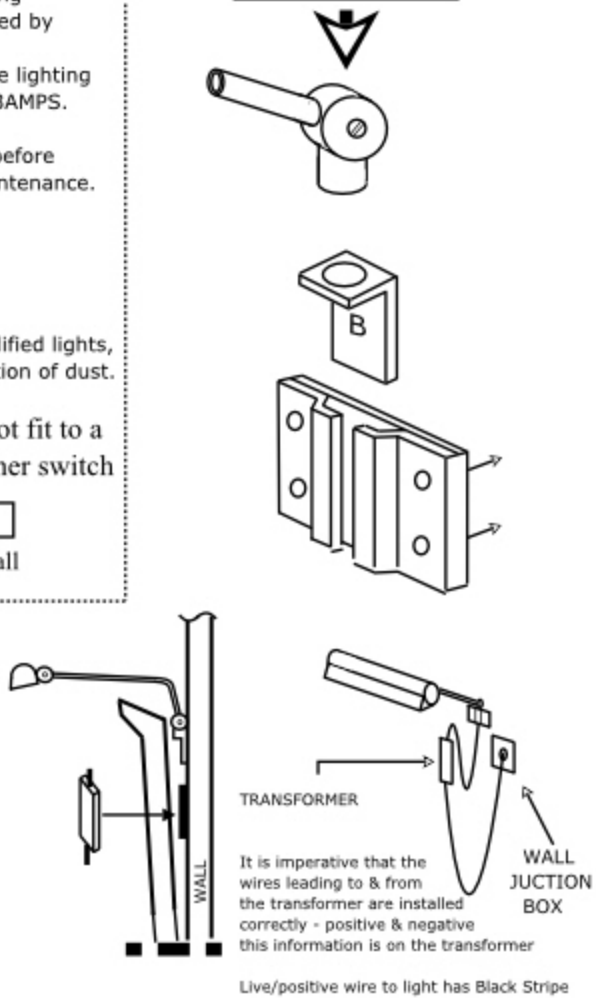

It is imperative that the wires leading to & from the transformer are installed correctly - positive & negative this information is on the transformer

Live/positive wire to light has Black Stripe
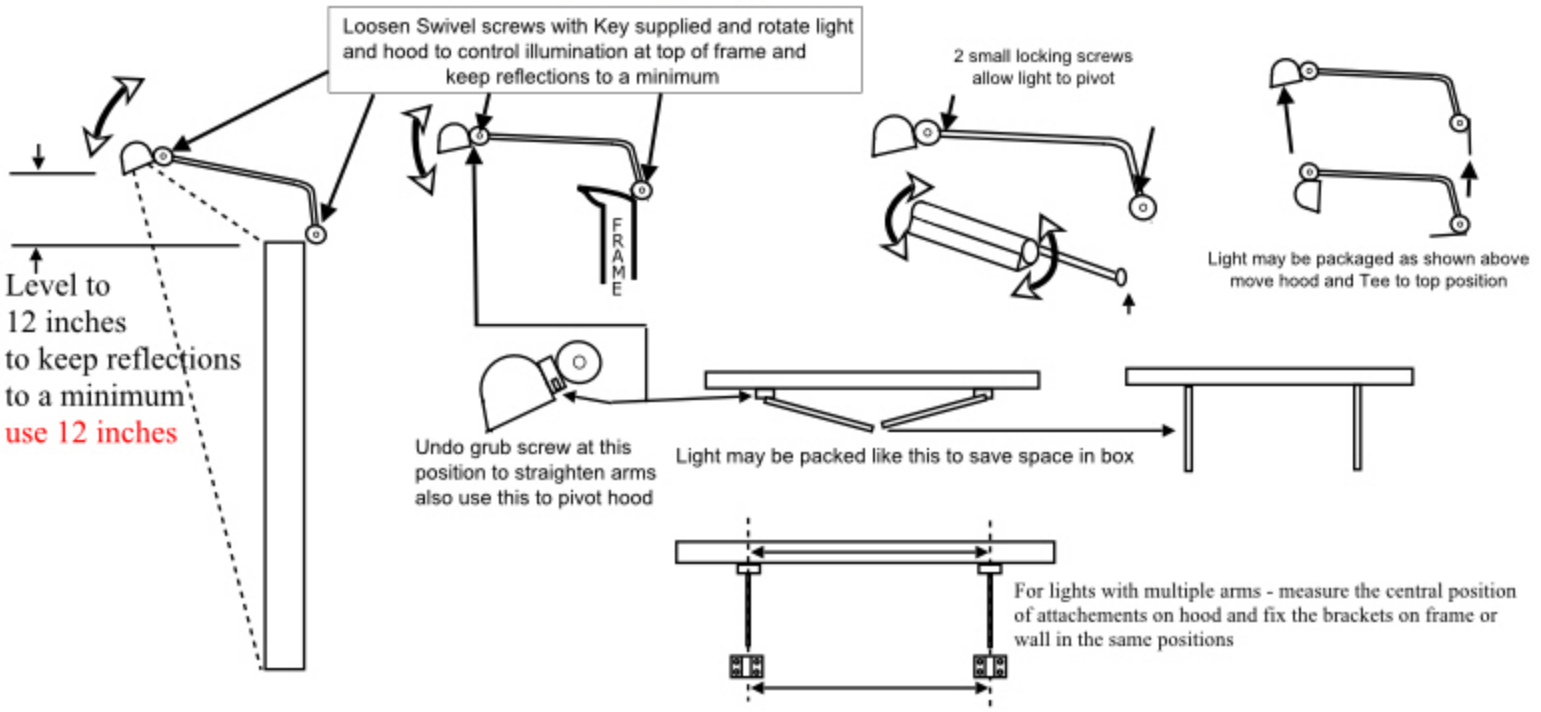
The Petworth light is made to be light in weight - it is vital that the arms and swivels are loose when fitting and adjusting - if stressed the arm can fracture